ELCO Lighting

Project name:

Fixture type:

Date:

Magnetic Transformers 120V and 277V to 12V or 277V to 120V

Features

- 20, 50, 250W Magnetic Transformers.
- ETR12, ETR12-20: 120V AC Input to 12V AC Output
- ETR-277, ETR277-20: 277V AC Input to 120V AC Output
- ETR12-277, P75-7: 277V AC Input to 12V AC Output
- UL recognized.

Specifications

Wattage	20W - 250W
Voltage	120V or 277V

Options

ETR12

ETR12-20

Dimensions

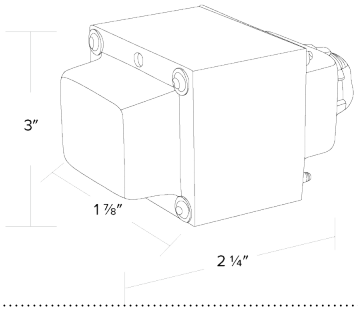

Product Numbers

Item	Description	Watts	Voltage
ETR12	Low Voltage Magnetic Transformer	50W	120V
ETR12-20	Low Voltage Magnetic Transformer	20W	120V
ETR-277	Magnetic Step-Down Transformer	250W	277V
ETR277-20	Magnetic Step-Down Transformer	20W	277V

2042 E. Vernon Ave., Vernon, CA 90058 • Tel (323) 231-2600 Fax (323) 231-3200 • elcolighting.com
© ELCO Lighting 2024. All rights reserved • Rev. 06 Mar 2024 • ELCO Lighting reserves the right to make specification and design changes without notice.