ELCO Lighting

Project name:

Fixture type:

Date:

4" IC Airtight Shallow Remodel Dedicated LED Housing

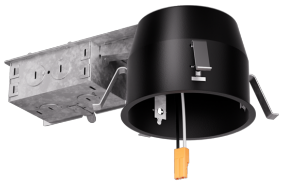

4" remodel dedicated LED housing. Compatible with 4" LED inserts, LED modules or PSA37 with MR16 trims.

Features

- Single wall IC airtight shallow remodel, for use in insulated ceilings.
- Meets Title 24 requirements. ENERGY STAR® Certified.
- Trims and inserts sold separately, MR16 LED with PSA37 or 4" Insert.

Specifications

Wattage	14W
Voltage	120V
Wet Location	Listed with wet location trims
Damp Location	Listed

Dimensions

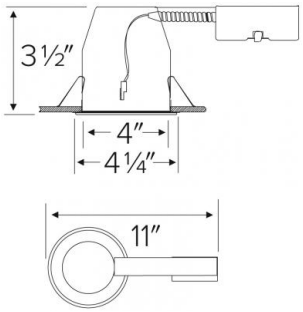

Technical Details

Construction:
- Shallow single wall IC rated for direct contact with insulation, for use in IC or non-IC conditions.
- Housing adjusts in frame to accommodate up to 1 1/4" ceiling thickness.
- Airtight housing with gasket to restrict airflow in accordance with ASTM E-283 air-tight requirements.
- Steel housing for greater heat dissipation.

Installation: Designed for ceiling plenums where 2x6 joists or taller joists are used. Maximum hole cutout is 4 3/8". Suitatble for T-grid and drop ceiling applications. See installation sheet for detailed information.

Electrical:
- Input Voltage: 120V AC.
- Inherently protected.

Dimmability: Dimmability based on lamp.

Lamp: Designed for use with ELCO 4" LED inserts, LED modules, or PSA37 with 4" MR16 trims.

Listings:
- cUL Listed for Damp Location.
- cUL Listed for Wet Location with select trims.
- cUL Listed for Feed Through.
- cUL Listed for Direct Contact with Insulation and Combustible Material.
- Airtight per ASTM E-283.
- Install a JA8-2016-E lamp/luminaire for Title 24 Compliance.

Warranty: ELCO Lighting warrants products will be free from defects in materials and workmanship for a period of 3 years.

Product Numbers

Item	Watts	Voltage
EL492RICA	14W	120V

2042 E. Vernon Ave., Vernon, CA 90058 • Tel (323) 231-2600 Fax (323) 231-3200 • elcolighting.com
© ELCO Lighting 2024. All rights reserved • Rev. 19 Mar 2024 • ELCO Lighting reserves the right to make specification and design changes without notice.

Compatible Products

For use with **4″ Dedicated LED ICA Shallow Housings**

4″ LED Inserts

Round Baffle

CAT NO.	SPECIFICATIONS
EL41027W	10W, 800 lm, 2700K
EL41030W	10W, 850 lm, 3000K
EL41035W	10W, 900 lm, 3500K
EL41040W	10W, 900 lm, 4000K
EL410CT5W, BB	12W, 850 lm, 2700K - 5000K CCT SWITCH

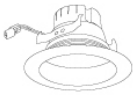

Round Reflector

CAT NO.	SPECIFICATIONS
EL41527W	10W, 800 lm, 2700K
EL41530W	10W, 850 lm, 3000K
EL41535W, BZ	10W, 900 lm, 3500K
EL41540W	10W, 900 lm, 4000K
EL41550W	10W, 950 lm, 5000K
EL415CT5W, BZ, BB	12W, 850 lm, 2700K - 5000K CCT SWITCH

HIGHLUMEN

Round Reflector

CAT NO.	SPECIFICATIONS
EL41727H, C	14W, 1000 lm, 2700K
EL41730C	14W, 1000 lm, 3000K
EL41735W, H, C	14W, 1100 lm, 3500K
EL41740W, H, C	14W, 1200 lm, 4000K
EL417CT5W, H	14W, 1000 lm, 2700K - 5000K CCT SWITCH

Round 5-CCT Reflector

CAT NO.	SPECIFICATIONS
EL455CT5W	9W, 600 lm, 2700K - 5000K CCT SWITCH

DIMS TO WARM
SUNSET DIMMING TECHNOLOGY

Round Insert

CAT NO.	SPECIFICATIONS
EL415SDW, BZ	10W, 700 lm, Sunset, Reflector

HIGHLUMEN

Round 5-CCT Baffle

CAT NO.	SPECIFICATIONS
EL412CT5W	14W, 1000 lm, 2700K - 5000K CCT SWITCH

Round Baffle Gimbal

CAT NO.	SPECIFICATIONS
EL414CT5W, B	13W, 700 lm, 2700K - 5000K CCT SWITCH

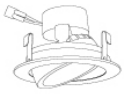

Round Gimbal

CAT NO.	SPECIFICATIONS
EL416CT5W, B, BZ	9W, 700 lm, 2700K - 5000K CCT SWITCH

HIGHLUMEN

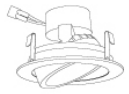

Round Gimbal

CAT NO.	SPECIFICATIONS
EL416HLCT5W	12W, 1000 lm, 2700K - 5000K CCT SWITCH

Square Gimbal

CAT NO.	
EL446CT5W, B, BZ	9W, 700 lm, 2700K - 5000K CCT SWITCH

Square Baffle

EL44127W	10W, 700 lm, 2700K
EL441CT5W	10W, 750 lm, 2700K - 5000K CCT SWITCH
EL441CT3BZ	10W, 750 lm, 2700K - 3500K

Square Reflector

EL442CT5W, BB, BZ	11W, 850 lm, 2700K - 5000K CCT SWITCH

*Finishes: **W** - All White, **BZ** - All Bronze, **C** - Chrome w/White Ring, **H** - Haze w/White Ring

2042 E. Vernon Ave., Vernon, CA 90058 • Tel (323) 231-2600 Fax (323) 231-3200 • elcolighting.com
© ELCO Lighting 2024. All rights reserved • Rev. 19 Mar 2024 • ELCO Lighting reserves the right to make specification and design changes without notice.